INSTRUMENT TRANSFORMERS

ALCE
TRANSFORMING SUPPORTING

INSTRUMENT TRANSFORMERS

OUTDOOR TYPES

INFORMATION ABOUT THE SAFE OPERATION OF CURRENT TRANSFORMERS

OPERATION CONDITIONS FOR CURRENT TRANSFORMERS

1. When the secondary terminals are connected to the measuring or protection devices, one of the terminals should be earthed for safety as seen in **FIGURE CT-1**

2. The secondary circuit of a current transformer must not be operated open-circuited

3. The secondary winding of a current transformer which will not be used must always be short-circuited and earthed as seen in **FIGURE CT-2**

4. For the transformer with reconnectable and/or tapped secondaries, unused terminals must be left open as seen in **FIGURE CT-3**

5.The current transformers which have capacitive divider tap (Ck) must be connected to the indicator. If the tap will not be used then it must be earthed as seen in **FIGURE CT-4**

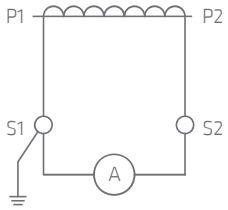

FIGURE CT-1

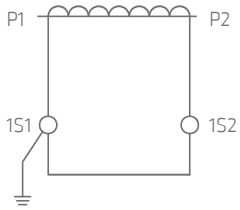

FIGURE CT-2

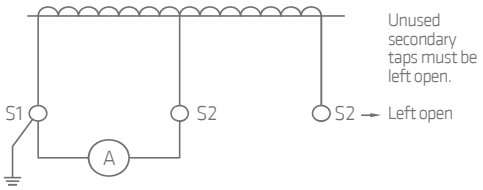

FIGURE CT-3

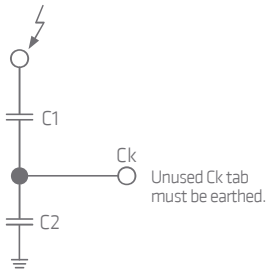

FIGURE CT-4

TECHNICAL DATA

Outdoor, cycloaliphatic epoxy resin insulated

Ambient air temperature: -40°C to **+55°C**

Altitude: Up to 1.000 meters above sea level **(*Up to 4000m on request)**

Isokeraunic level: Min. value 25, max 100

Exposure to solar radiation: More than 2.800 hours annually peaking at 1.000W/m2 for horizontal surfaces

Max. relative humidity: 100% / Max. wind velocity: 100km/h

Areas of coastal salt spray and/or industrial pollution with equivalent salt deposit densities in the range 2 to 3 g/m3

The transformer shall not be subjected to "sand storms" when mounted outdoors

Outer protection, such as a protection box, terminal box or cable box which is resistant to sand storms shall be used. Subjection to sand storms voids the guarantee of resin casted transformers

INFORMATION ABOUT THE SAFE OPERATION OF VOLTAGE TRANSFORMERS

OPERATION CONDITIONS FOR POTENTIAL TRANSFORMERS

1. When the secondary terminals are connected to the measuring or protection devices, one of the terminals should be earthed for safety as seen in **FIGURE VT-1**

2. The base plate must be earthed.

3. The secondary circuits must not be short-circuited during operation. Otherwise the voltage transformers will be thermally destroyed.

4. If any of the secondary windings of a voltage transformer, used for the purpose of measuring, will not be used then it must be left open with one terminal connected to earth as seen in **FIGURE VT-2.** However, even if the open-delta windings are not to be used for detection of earth faults, they must be connected in an open delta circuit and an appropriate resistor (depending on the voltage and thermal power rating of the secondary] must be connected and open-delta circuit must be earthed only at one point as seen on **FIGURE VT-4.** Please refer to the technical recommendations below.

5. For single phase transformers, the neutral terminal of the primary " N " must be earthed in the earthed (neutral) systems as seen in **FIGURE VT-3**

Other important points and notes

When using single pole insulated inductive voltage transformers, it is very important to be aware that, if a circuit is being closed or during the decaying period of an earth fault, ferroresonance may occur.

Ferroresonance can lead to the overheating and thermal destruction of the voltage transformer or high levels of voltages may be induced. In general, ferroresonance can be eliminated by the use of an appropriate resistor. The resistor is placed as a burden in open-delta circuit formed by three voltage transformers delta windings. The open-delta circuit must always be earthed only at one point as seen in **FIGURE VT-4.** The open-delta connection can also be used for earth-fault monitoring with appropriate devices.

As the number of cable systems is increasing in the energy distribution systems, the protection of voltage transformers have become very important for the uninterrupted operation of the system without any failure and/or down time. For that reason, ALCE is always recommending the use of open-delta windings in single phase inductive voltage transformers.

The use of open-delta windings may not be sufficient for the protection of voltage transformers by itself in some cases. An energy systems design engineer shall always use proper surge arresters, avalanche diodes, limiters and/or their combinations for the survivability of the distribution system after a fault or disturbance.

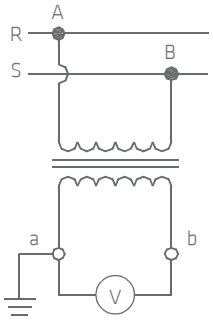

FIGURE VT-1

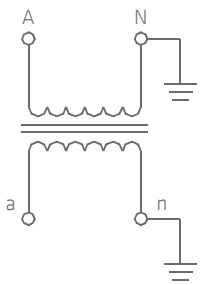

FIGURE VT-3

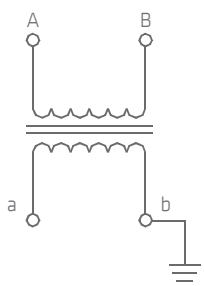

FIGURE VT-2

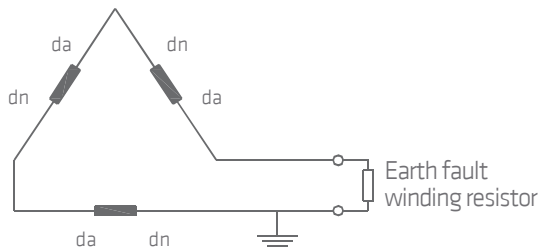

FIGURE VT-4

OUTDOOR

CURRENT TRANSFORMERS AH24

12-17,5- 24 kV
Block Type Design
Outdoor Application

Standard: IEC 61869-2 / ANSI / GOST / VDE

TECHNICAL DATA

Type		AH24
Rated data		
Highest voltage for equipment, Um (r.m.s) (Max.)	(kV)	12 - 17,5 - 24
Test voltages	(kV)	28/75 - 38/95 - 50/125
Rated frequency	(Hz)	50 or 60
Rated primary current, (Max.)	(A)	3000
Rated secondary current	(A)	1 or 5
Maximum Rated burden in class 0.2 / 0.5 / 1.0 / 5P / 10P	(VA)	60
Rated short time thermal current Ith (1s)	(kA)	Max.60 (max.1000xIn)
Rated dynamic current Idyn	(kA)	Max.120 (2,5xIth)
Weight (approx.)	(kg)	48

DIMENSIONS

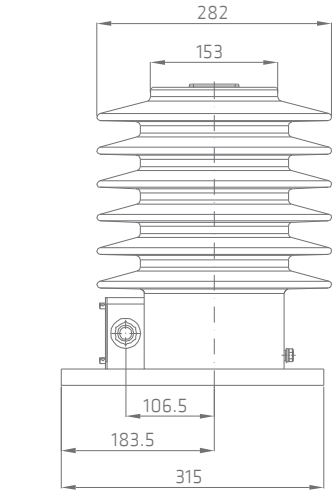

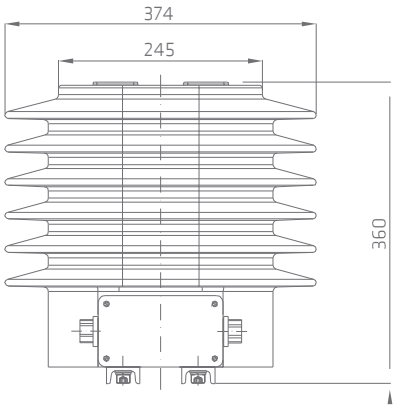

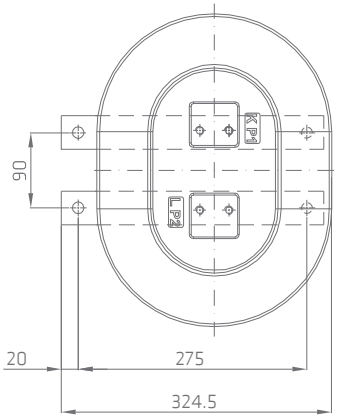

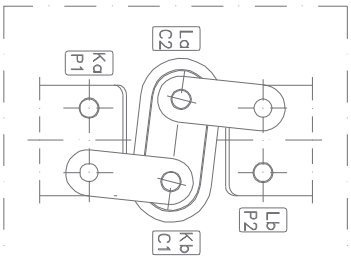

For connection in parallel

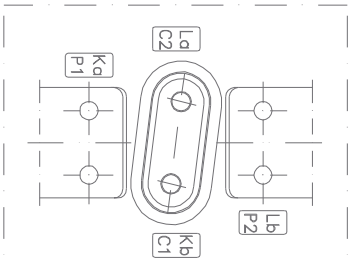

For connection in series

PRIMARY CONNECTION TERMINALS

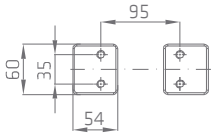

up to 125 0A

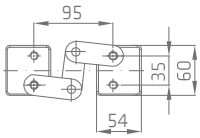

In <= 2x300A

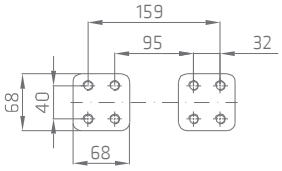

1250A < In ≤ 3000A

OUTDOOR

CURRENT TRANSFORMERS A32H-2

36 kV
Block Type Design
Outdoor Application

Standard: IEC 61869-2 / ANSI / GOST / VDE

TECHNICAL DATA

Type		A32H-2
Rated data		
Highest voltage for equipment, Um (r.m.s) (Max.)	(kV)	36
Test voltages	(kV)	70 / 170
Rated frequency	(Hz)	50 or 60
Rated primary current, (Max.)	(A)	3000
Rated secondary current	(A)	1 or 5
Maximum Rated burden in class 0.2 / 0.5 / 1.0 / 5P / 10P	(VA)	60
Rated short time thermal current Ith (1s)	(kA)	Max.60 (max. 1.000xIn)
Rated dynamic current Idyn	(kA)	Max.120 (2,5xIth)
Weight (approx.)	(kg)	60

CURRENT TRANSFORMERS A32H-2

DIMENSIONS

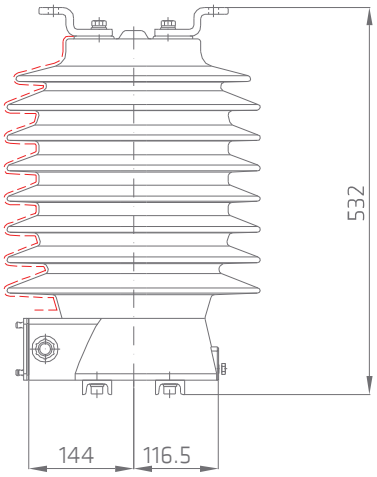

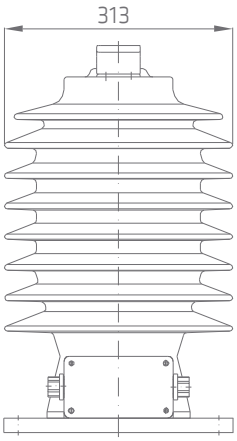

A

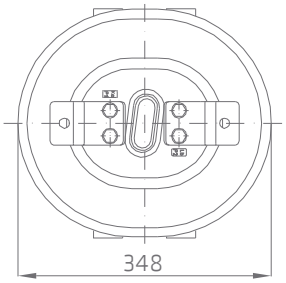

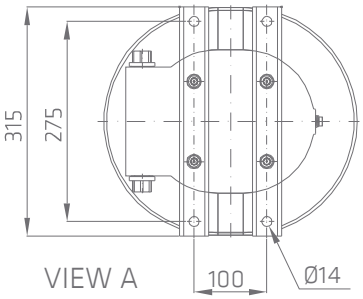

VIEW A

CONNECTION FOR PRIMARY TAPPED

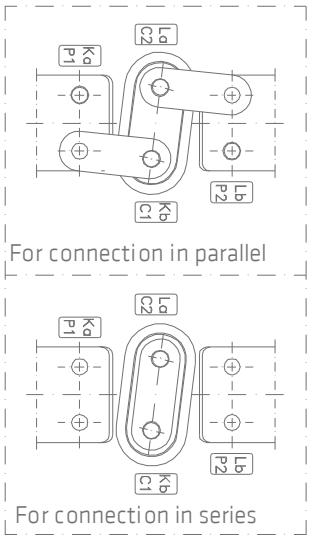

NOTE : Primary terminals are coated with tin (Sn).

PRIMARY CONNECTION TERMINALS

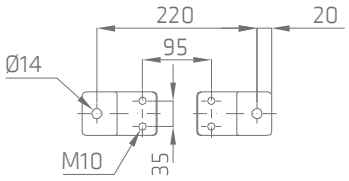

In <= 600A

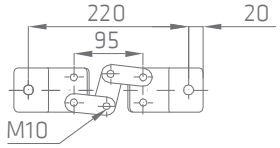

In <= 2x300A

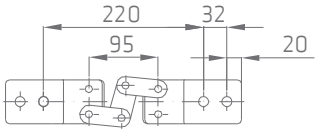

2x300 < In <= 2X600A

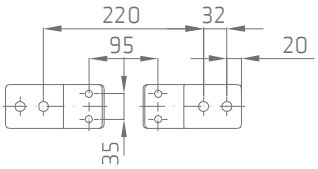

600 < In <= 1250A

OUTDOOR

VOLTAGE TRANSFORMERS SINGLE POLE

12-17,5- 24 kV
Block Type Design
Single Pole Insulated
Outdoor Application

Standard: IEC 61869-3 / ANSI / GOST / VDE

TECHNICAL DATA

Type		VH24	VH36
Rated data			
Highest voltage for equipment, Um (r.m.s) (Max.)	(kV)	3.6 -7.2 – 12– 17.5 - 24	36
Test voltage	(kV)	10/40, 20/60, 28/75, 38/95, 50/125	70 /170
Reted frequency	(Hz)	50 or 60	50 or 60
Rated primary voltage, Un	(kV)	3,3 ... 24/√3	30 ... 36/√3
Secondary voltage	(V)	100/√3 ... 120/√3	100/√3 ... 120/√3
Rated burden in class 0.2 - 0.5 - 1.0	(VA)	Max.150	Max.150
Maximum unrated burden for protection purpose in class 3P/6P	(VA)	100	100
Thermal limiting current for earth fault detection winding	(A)	6	6
Rated voltage factor	(8h)	1,9 Un	1,9 Un

VOLTAGE TRANSFORMERS SINGLE POLE

DIMENSIONS

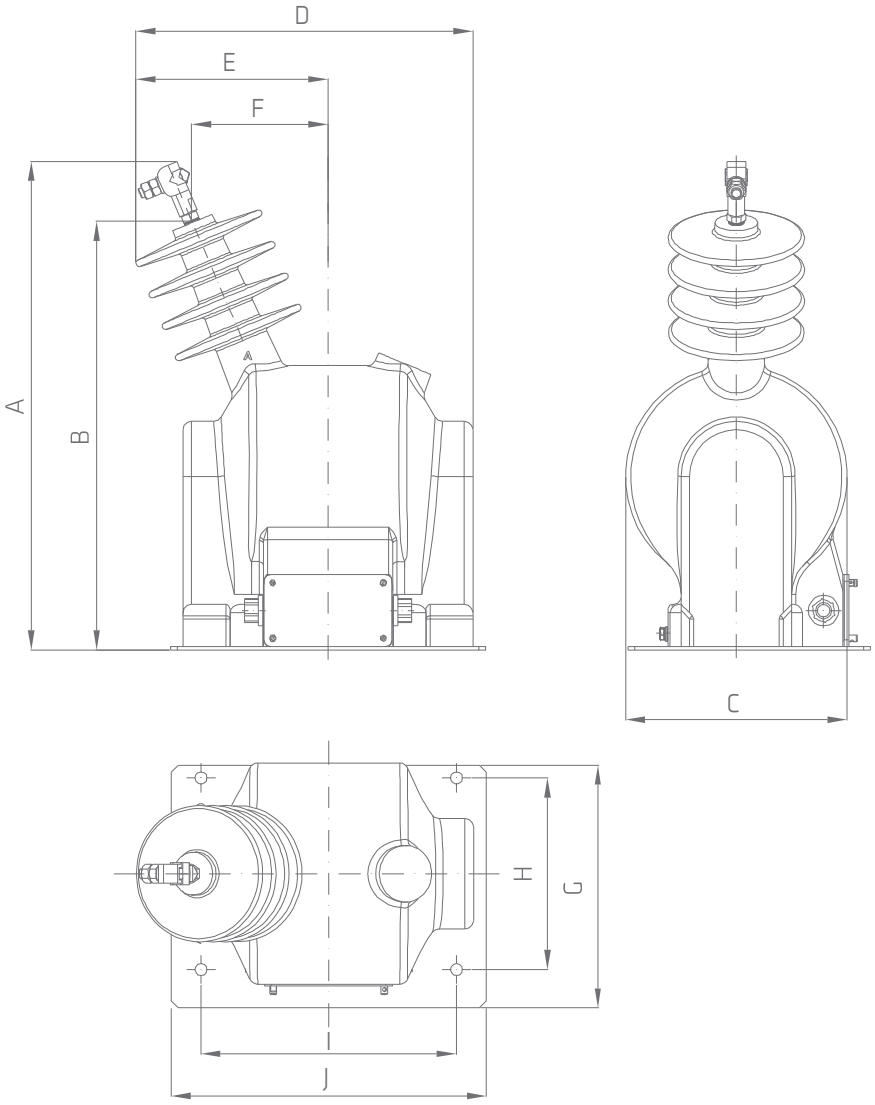

Type	VH24	VH36
	Dimensions (mm)	
A	574	672
B	504	606
C	260	280
D	396	479
E	226	294
F	160	225
G	285	285
H	225	225
I	300	300
J	370	370

OUTDOOR

VOLTAGE TRANSFORMERS DOUBLE POLE

36 kV
Block Type Design
Double Pole Insulated
Outdoor Application

Standard: IEC 61869-3 / ANSI / GOST / VDE

TECHNICAL DATA

Type		2VH24	2VH36
Rated data			
Highest voltage for equipment, Um (r.m.s) (Max.)	(kV)	3.6 -7.2 – 12– 17.5 - 24	36
Test voltage	(kV)	10/40, 20/60, 28/75, 38/95, 50/125	70 / 170
Reted frequency	(Hz)	50 or 60	50 or 60
Rated primary voltage, Un	(kV)	3,3 ... 24	30 ... 36
Secondary voltage	(V)	100 ... 120	100 ... 120
Rated burden in class 0.2 - 0.5 - 1.0	(VA)	Max. 150	Max. 150
Maximum unrated burden for protection purpose in class 3P/6P	(VA)	–	–
Thermal limiting current for earth fault detection winding	(A)	–	–
Rated voltage factor	(8h)	1,2 Un	1,2 Un

VOLTAGE TRANSFORMERS DOUBLE POLE

DIMENSIONS

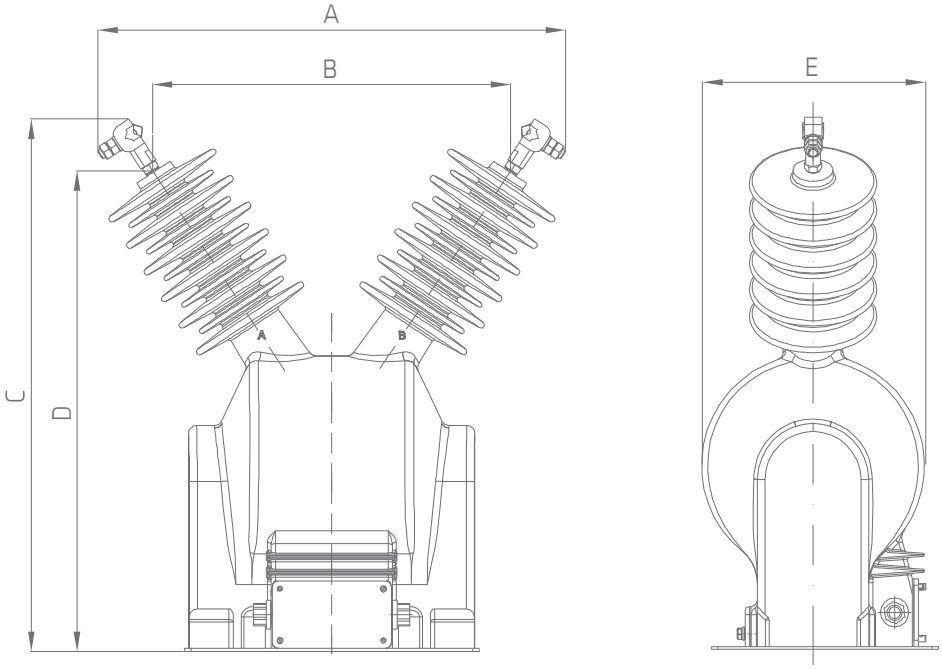

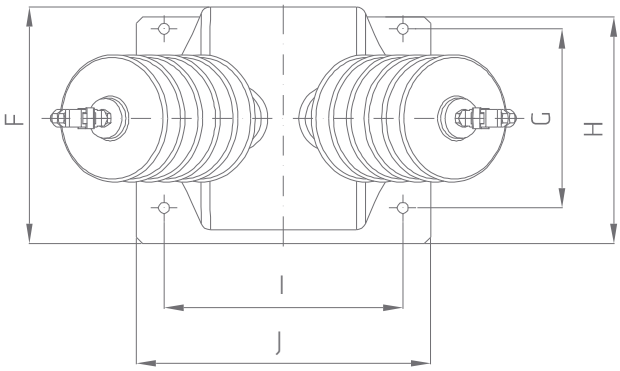

Type	2VH24	2VH36
	Dimensions (mm)	
A	446	587,5
B	320	450
C	574	672
D	504	606
E	260	280
F	287,5	297,4
G	225	225
H	285	285
I	300	300
J	370	370

ALCE Elektrik Sanayi ve Ticaret A.Ş.
Ramazanoğlu Mah. Transtek Cad. No: 6
Pendik 34906 İstanbul, TURKEY
HQ T +90-216- 585 42 00 F +90-216- 378 23 27
Sales:T+90-216 585 43 09 -T+90-216- 585 43 03
sales@alce-elektrik.com.tr - sales@ct-vt.com
alce-elektrik.com.tr

K_EN_ITOD_OG_17R01_GRAY_18/07_170_MKS_OMG